Part 2-D) For installation with Tsukayu adaptive brackets & plates assembly kit

(xiii) Suzuki C90T Boss

Two hardware kits are needed: a) C90P adaptive brackets kit; b) Q-C90 bracket plates assembly kit

Fig. 2-D-(xiii)-1

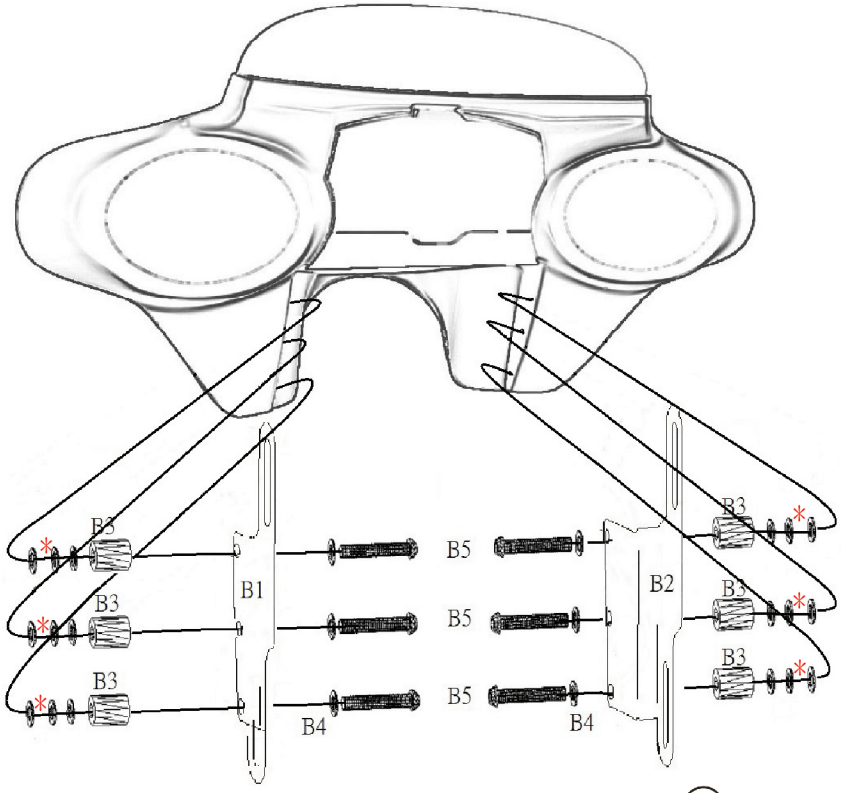

Q-C90 bracket plates kit includes
(Refer to Fig. 2-D-(xiii)-1)
- (B1) Q-C90 left x 1pc
- (B2) Q-C90 right x 1pc
- (B3) spacer 15mm(L) x 8.5mm(I) x 18mm(O) x 4pcs
- (B4) M8 washers x 20pcs
- (B5) M8 x 30mm bolts (hex head) x 6pcs

*Note: Refer to Step 5

Fig. 2-D-(xiii)-2

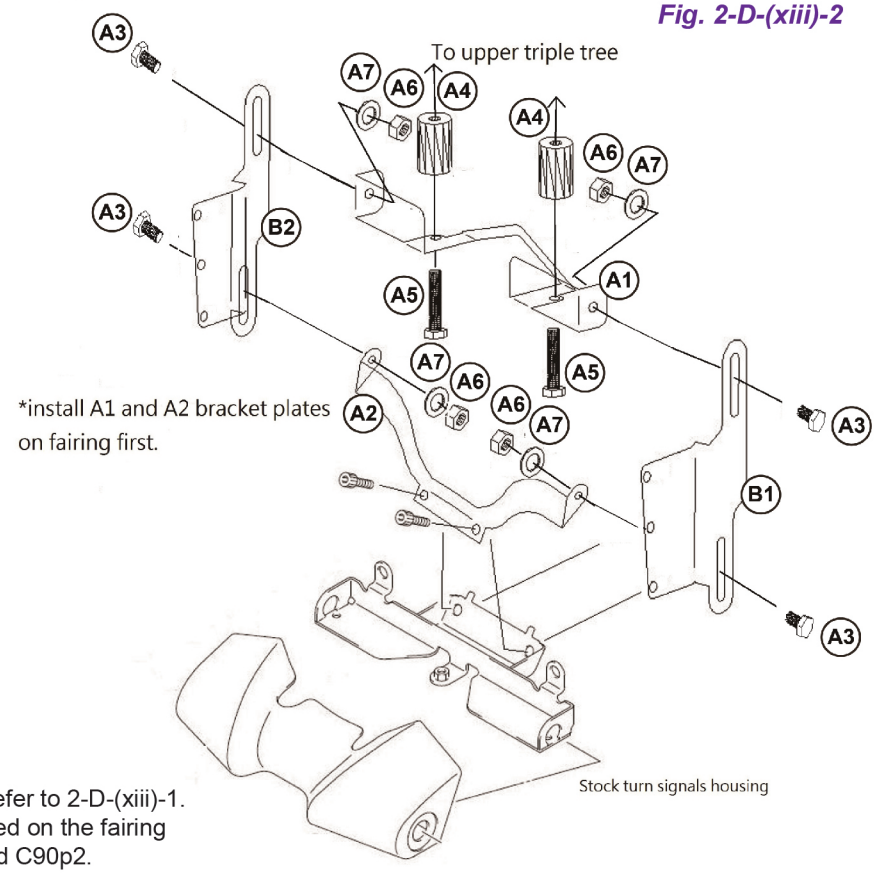

C90P adaptive brackets kit
includes (Refer to Fig. 2-D-(xiii)-1 and 2-D-(xiii)-2):
- (A1) C90p1 (**5mm thick) x 1pc
- (A2) C90p2 (**5mm thick) x 1pc
- (A3) M8 x 15mm bolts (hex head) x 4pcs
- (A4) spacer 30mm(L) x9mm(I) x15mm(O) x 2pcs
- (A5) M8 x 40mm bolts (hex head) x 2pcs
- (A6) M8 nuts x 4pcs
- (A7) M8 washers x 10pcs

*install A1 and A2 bracket plates on fairing first.

1. Cover the gas tank, front fender and headlight with protective material.

2. Remove the leadlamp cover, headlight assembly, headlight housing and front turn signal light cover (Refer to VL1500 service manual).

3. Install the Q-C90 left and right brackets on the fairing, refer to 2-D-(xiii)-1. Note that the Q-C90 left and right brackets must be installed on the fairing before the assemble with the adaptive brackets C90p1 and C90p2.

4. Install the upper and lower adaptive brackets, with reference 2-D-(xiii)-2. Measure the distance between the slots on left and right quick release latches, this distance will be used to adjust the distance between the bracket plates on fairing, you need to measure it as accurate as possible, we suggest measuring in mm.

*5. Add M8 washers if the distance of the two mounting plates doesn't perfectly match the distance between the two slots of Q-C90. The spacers provided are close to what you need, but you may still need to add washers until they perfectly match, make sure you use same number of spacers and washers for all holes. Don't mix up Left and Right bracket plates, the latches come with the bracket plates. Try to put the fairing on, normally you will need to modify the number of washers several times until they match.

6. Now put the fairing on, you may need a helper for doing this step easier. Make sure the bracket plates are tightened securely. Latch the both side bracket plates securely. Tighten all the bolts on the fairing and all bolts on the whole mounting system.

Copyright © Tsukayu - All rights reserved